Scan to go to website

MTX3-88-PR-PRO Quick Start Guide

This guide helps you install and use your **MTX3-88-PR-PRO** for the first time.

Go to www.kramerav.com/downloads/MTX3-88-PR-PRO to download the latest user manual and check if firmware upgrades are available.

Step 1: Check what's in the box

- **MTX3-88-PR-PRO 8x8 All-in-one Matrix**
- 1 multi-signal USB-C cable (1m)
- 2 Fuses
- 1 Set of rack ears
- 2 Power cords
- 4 Rubber feet
- 1 Quick start guide

Step 2: Get to know your MTX3-88-PR-PRO

For countries outside the US and EU, a special power cable must be ordered separately.
For a list Kramer C19 power cords, go to the MTX3-88-PR-PRO website, Accessories tab.
If your country is not listed, purchase a C19 power cord with correct wall socket.

Use the embedded webpages to configure which HDBT ports are transmitters, and which are receivers. For detailed instructions, refer to the **MTX3-88-PR-PRO** User Manual.

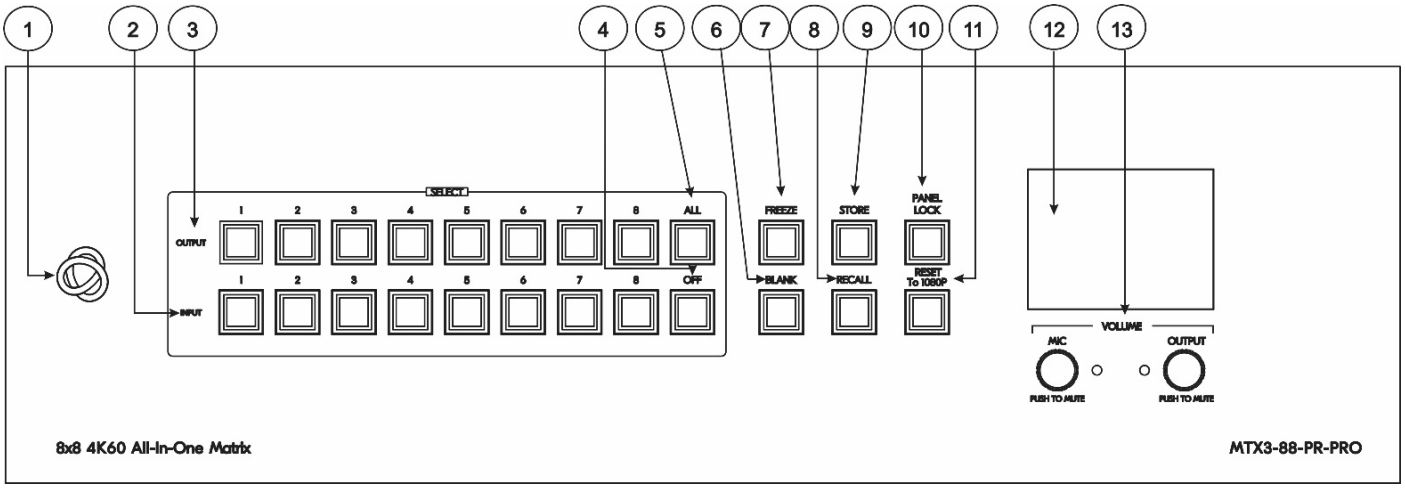

#	Feature	Function		
1	LED (behind the Kamer logo)	**LED Device & Networking Status**	**Indicates**	**Screen Displayed Text (12)**
		Dark	Power Off	--
		Lights red	Powering On	Restart
		Lights white	Power On	Active
			FW background download	Firmware download
			No IP address acquired	No active IP address
			A network has been detected and has a valid IP address	IP address acquired
			A device identification command was sent (Flag me)	Flag me is activated

Manufacturer: Kramer Israel
2 Negev St. Airport City 7019900
+972 (0)73-265-0200
info_il@kramerav.com

Importer: Kramer EMEA Netherlands
Stroombaan 16, The Garden 1181VX
Amstelveen
info_EMEA@kramerav.com

P/N: 2900-301903QS Rev: 4

<table>
<tr><th>#</th><th>Feature</th><th colspan="3">Function</th></tr>
<tr><td></td><td></td><td>Flashes white</td><td>Standby</td><td>Power-save stand-by</td></tr>
<tr><td></td><td></td><td></td><td>IP fallback address / Network Issue</td><td>Fallback IP address is active; or network issue.</td></tr>
<tr><td>2</td><td>INPUT SELECT Buttons (1 to 8)</td><td colspan="3">When pressed immediately after pressing an output, causes the AV signal to route the selected input to the selected output.
When pressed independently – informs the user of the routing of this input by lighting the destination output button.</td></tr>
<tr><td>3</td><td>OUTPUT SELECT Buttons (1 to 8)</td><td colspan="3">Press to select an output to which the input is routed.</td></tr>
<tr><td>4</td><td>ALL Button</td><td colspan="3">Press followed by an input button to connect the selected input to all outputs. For example, press ALL and then press IN 2: Input 2 is routed to all outputs.</td></tr>
<tr><td>5</td><td>OFF Button</td><td colspan="3">Press after pressing an output button to turn off the selected output.
To turn off all the outputs, press ALL followed by OFF.</td></tr>
<tr><td>6</td><td>BLANK Button</td><td colspan="3">Press after pressing an OUT button (1~ 8) to toggle blanking for that output. The BLANK button lights if the output corresponding to the pressed-OUT button is blanked.</td></tr>
<tr><td>7</td><td>FREEZE Button</td><td colspan="3">Press after pressing an OUT button (1-8) to toggle freezing that output. The FREEZE button lights if the output corresponding to the pressed output button is frozen.</td></tr>
<tr><td>8</td><td>RECALL Button</td><td colspan="3">Press the RECALL button followed by pressing an OUT button (1-8) to recall the settings saved in the memory denoted by the OUT button number.</td></tr>
<tr><td>9</td><td>STORE Button</td><td colspan="3">Press the STORE button followed by pressing an OUT button (1-8) to store the settings. The current status (routing, audio and video settings, USB status and more) are saved in the memory denoted by the OUT button number.</td></tr>
<tr><td>10</td><td>PANEL LOCK Button</td><td colspan="3">Press and hold to toggle the locking/releasing of the front panel buttons.</td></tr>
<tr><td>11</td><td>RESET To 1080P Button</td><td colspan="3">Press and hold button for about 3 seconds to set the resolution on all outputs to 1080p.</td></tr>
<tr><td>12</td><td>LCD Display</td><td colspan="3">Shows the connection and device status.</td></tr>
<tr><td>13</td><td>VOLUME</td><td>Name</td><td colspan="2">Function</td></tr>
<tr><td></td><td></td><td>MIC Knob</td><td colspan="2">Turn clockwise/counterclockwise to increase/decrease the volume of all microphone inputs. Press to toggle muting/unmuting the microphones.
When MUTED, the MIC LED lights red.</td></tr>
<tr><td></td><td></td><td>MIC LED</td><td colspan="2">Lit when the mic is muted</td></tr>
<tr><td></td><td></td><td>OUTPUT Knob</td><td colspan="2">Turn clockwise/counterclockwise to increase/decrease the volume of all outputs.
Includes analog and Dante but does not affect HDMI/HDBT outputs.
Press to toggle muting/unmuting the audio outputs.
When MUTED, the OUTPUT LED lights red.</td></tr>
<tr><td></td><td></td><td>OUTPUT LED</td><td colspan="2">Lit when the output is muted.</td></tr>
</table>

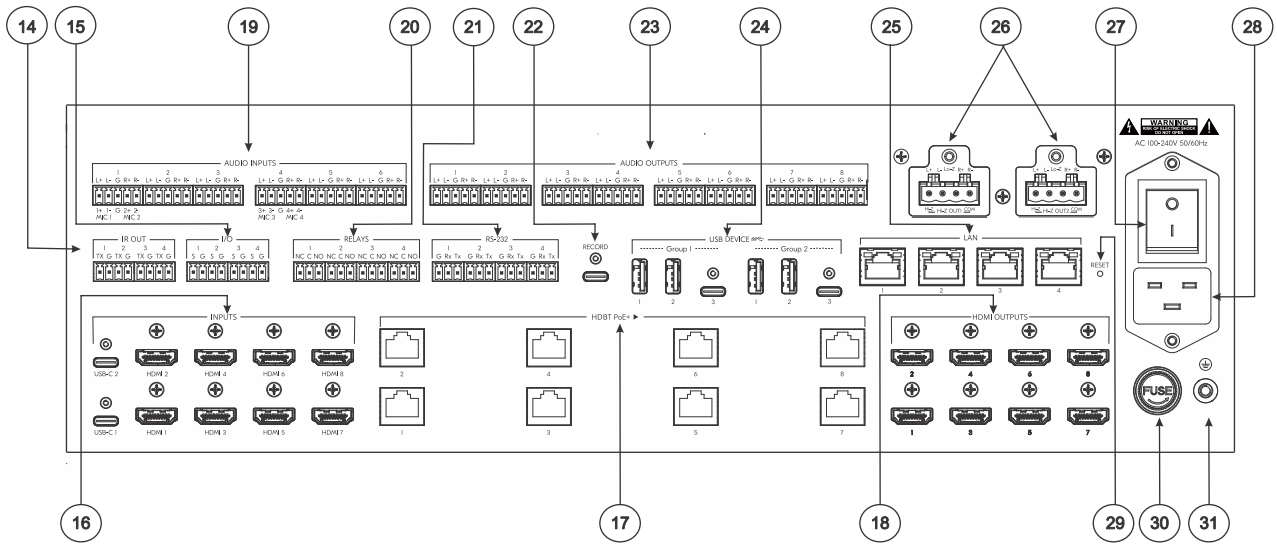

#	Feature		Function
14	IR OUT 2-pin Terminal Block Connectors (1 to 4)		For controlling IR-controlled devices (for example, connect to IR emitter cables to control a TV monitor).
15	I/O 2-pin Terminal Block Connectors (1 to 4)		Connect to: · Input-triggering devices (for example, remote buttons or occupancy sensors), OR · Output-triggered devices (for example, remote alarm LED indication, blinds and lights, etc.). Each GPIO port may be configured as a digital input, a digital output or an analog input.
16	INPUTS	USB-C Connectors (1&2)	Connect to USB-C AV sources: • that support DisplayPort Alternate Mode, for example, a laptop) to share content. • to communicate with the USB devices (for example, a PTZ camera) that are connected to the device, • to connect to the LAN • to charge the connected sources (that support USB Power Delivery 2.0).
		HDMI Connectors (1-8)	Connect to an HDMI sources.
17	HDBT PoE+► RJ-45 Connectors (1 to 8)		Connect to PoE-accepting HDBT transmitters or receivers.
18	HDMI OUTPUTS Connectors (1 to 8)		Connect to HDMI acceptors.
19	AUDIO INPUTS	AUDIO 5-pin Terminal Block (1 to 6)	Connect to balanced stereo audio sources. Audio inputs 1 and 4 are independently configured for accepting either balanced stereo inputs or 3 mono mic inputs.
		MIC 3-pin Terminal Block (Mic 1 to Mic 4)	If configured as mic inputs, these ports may be connected to dynamic or condenser (with 48V phantom power) microphones. GND is common for MIC 1&2 and MIC 3&4.
20	RELAYS 3-pin Terminal Block Connectors (1 to 4)		Connect to relay-controlled devices (for example, a projector screen).
21	RS-232 3-pin Terminal Block Connectors (1 to 4)		Connect to RS-232 controllers or RS-232 controlled devices (for example, a PTZ USB camera) to be controlled via an IP-connected controller (for example, **SL-240C**), or for extension to an HDBT device. RS-232 Port 1 can be configured for control of MTX3-88-PR-PRO.
22	RECORD		Connect to an audio USB host (for example, a PC USB device port), for recording or monitoring the audio output.
23	AUDIO OUTPUTS 5-pin Terminal Block Connector (1 to 8)		Connect to balanced stereo audio acceptors.

#	Feature			Function
24	USB DEVICE	Group 1	USB 3.2 Type A Ports (1&2)	Connect to USB devices using type A connector.
			USB 3.2 Type-C Port (3)	Connect to USB devices using type C connector.
		Group 2	USB 3.2 Type A Ports (1&2)	Connect to USB devices using type A connector.
			USB 3.2 Type-C Port (3)	Connect to USB devices using type C connector.
25	LAN RJ-45 Connector (1 to 4)			Connect to the LAN. LAN 1 is designated for device management and control. Other LAN ports are for all other IP services.
26	Speaker Out			Outputs four selected audio signals in four channels. • For Lo-Z: connect stereo output to Lo-Z speakers: L+ and L- to the left speaker; R+R- to the right speaker. • For Hi-Z (70V or 100V): connect Hi-Z and COM to mono Hi-Z speakers.
27	Mains Power Switch			Switch to turn the device On or Off.
28	AC Socket (Mains power)			Connect to AC power
29	RESET Button			Press to reboot or reset device to factory default. • To reboot the device, press and hold for 5 seconds. • To reset to factory default settings, press and hold continuously during the power-up cycle.
30	FUSE (Mains power)			Fuse for protecting the device.
31	GND			Connect to grounding wire (optional).

Step 3: Mount MTX3-88-PR-PRO

To rack mount the machine, attach both rack ears (by removing the screws from each side of the machine and replacing those screws through the rack ears) or place the machine on a table.

- Ensure that the environment (e.g., maximum ambient temperature & air flow) is compatible for the device.
- Avoid uneven mechanical loading.
- Appropriate consideration of equipment nameplate ratings should be used for avoiding overloading of the circuits.
- Reliable earthing of rack-mounted equipment should be maintained.

Step 4: Connect inputs and outputs

Always switch OFF the power on each device before connecting it to your **MTX3-88-PR-PRO**.

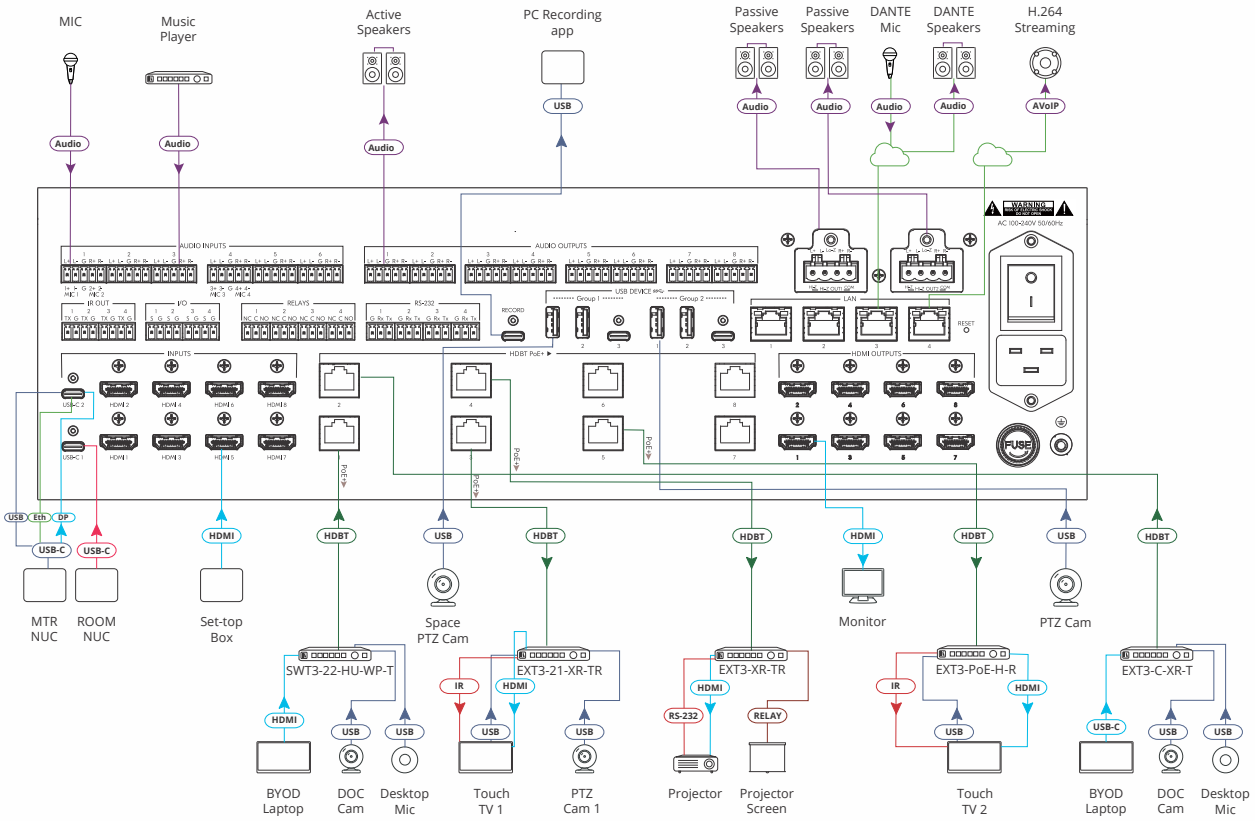

Wiring the RJ-45 Connectors

Connecting the audio output

To a balanced stereo audio acceptor:

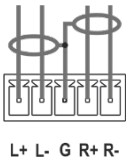

To an unbalanced stereo audio acceptor:

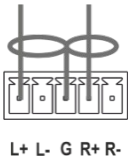

Wiring the RJ 45 Connectors

This section defines the CAT pinout, using a straight pin-to-pin cable with RJ 45 connectors.

For HDBT cables, it is recommended that the cable ground shielding be connected/soldered to the connector shield.

EIA /TIA 568B	
PIN	Wire Color
1	Orange / White
2	Orange
3	Green / White
4	Blue
5	Blue / White
6	Green
7	Brown / White
8	Brown

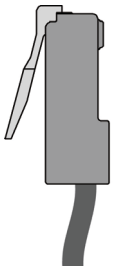

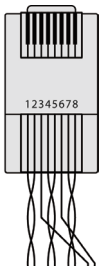

Step 5: Operate MTX3-88-PR-PRO

Operate **MTX3-88-PR-PRO** via:

- Front panel buttons.
- Remotely, by IP or RS-232 serial commands transmitted by a touch screen system, PC, or other serial controller connected to RS-232 port 1.
- Device web pages via the IP client connection.

RS-232 Control / Protocol 3000			
Baud Rate:	115,200	Parity:	None
Data Bits:	8	Command Format:	ASCII
Stop Bits:	1		
Example: (flash LEDs on the front panel for 60 seconds): #IDV<CR>			
Default IP Parameters – DHCP ON			
Fallback IP Address: • If 192.168.1.39 is already in use, 192.168.1.40 is assigned. • If both default fallback IPs are in use, then an available IP address will be assigned randomly.	192.168.1.39 (1st default fallback IP) 192.168.1.40 (2nd default fallback IP)	UDP Port #:	50000
Subnet mask:	255.255.0.0	TCP Port #:	5000
Gateway:	192.168.0.1	User/Password	Admin/Admin
Factory Reset			
Protocol 3000:	"#FACTORY" command. After receiving "FACTORY OK" perform one of the following to restart the device and complete the procedure: • Power cycle • Send command "#RESET"		
Web Pages:	In the Settings page, click Factory Reset.		

Step 6: Connect Power

Connect the power cord to **MTX3-88-PR-PRO** and plug it into the mains electricity.

Safety Instructions (See www.kramerav.com for updated safety information)

Caution:

- For products with relay terminals and GPI\O ports, please refer to the permitted rating for an external connection, located next to the terminal or in the User Manual.
- There are no operator serviceable parts inside the unit.

Warning:

- Use only the power cord that is supplied with the unit.
- Disconnect the power and unplug the unit from the wall before installing.
- Do not open the unit. High voltages can cause electrical shock! Servicing by qualified personnel only.
- To ensure continuous risk protection, replace fuses only according to the rating specified on the product label which located on the bottom of the unit.

Switch an input to an output

Press an output button followed by an input button to switch the selected input to the selected output.

Store a switching setting

1. Set the matrix to the desired operation preset configuration.
2. Press **STORE**. The STORE button lights.
3. Press an output button (1 to 8).

   The current status (routing, audio and video settings, USB status and more) are saved in the memory denoted by the OUT button number.

Recall a switching setting

1. Press **RECALL**. The RECALL button lights.
2. Press an output selection button (1 to 8) to select the desired operation preset configuration.

   The preset saved in the memory denoted by the OUT button number is recalled.

The terms HDMI, HDMI High-Definition Multimedia Interface, and the HDMI Logo are trademarks or registered trademarks of HDMI Licensing Administrator, Inc.