# SWT3-21-HU-TR

2x1 4K60 USB–C/HDMI Switcher Extender

SWT3-21-HU-TR is a high-performance auto-switcher with one USB-C and one HDMI/USB input, HDMI output and long-range HDBaseT 3.0. The HDBaseT 3.0 port is configurable as either transmit (output) or receive (input) link. The unit extends a 4K60Hz (4:4:4) HDMI, USB 2.0, RS-232, IR and I/O signal over a 40 meter twisted pair cable. The local and remote connected USB peripherals, such as a room camera and microphone, are switchable for use of the switcher active USB host, for convenient hybrid meeting operation with both room and online participants. The unit is ideally deployed either at the presentation source end or at the display end

## FEATURES

Hybrid-meeting Collaborative Switching - Controllable coupled–signals switching of both AV and USB host inputs, for concurrent connection with AV output and USB devices, allows collaborative hybrid meeting where meeting participants are switched to share their content with both room and online meeting participants

BYOD Ease and Convenience - BYOD Ease and Convenience – Connect any DP–Alt–Mode–capable USB–C device as an AV source using a single USB-C cable. The connection also provides USB and Ethernet access, and (if PD–2.0–capable) up to 60 watts of charging power

High Performance Standard Extender - Professional HDBaseT 3.0 extender for providing long–reach signals over twisted–pair copper infrastructures. SWT3–21–HU–TR is a standard extender that can be connected to any market–available HDBaseT–compliant extension product. For optimum extension reach and performance, use recommended Kramer cables

HDMI Signal Switching - HDCP 2.3 compliant, supporting deep color, x.v.Color™, CEC, HDMI uncompressed audio channels, Dolby TrueHD, DTS–HD, 2K, 4K, and 3D as specified in HDMI 2.0b

Flexible USB Switching and Extension - An active USB 3.2 host is connected to the switcher extender on either the transmitter or receiver sides. USB 2.0 signals are extended between the switcher extender transmitter and receiver sides, enabling connection and switching of the active USB host to both local USB 3.1 and remote USB 2.0 devices, such as camera and audio devices, or HID (Human Interface Devices) mouse or keyboard devices

HDMI Mirroring - On switcher transmitter side, active USB–C or HDMI input signal is transmitted on HDBT output, and in parallel mirrored to HDMI output port for connecting a local monitor or adding an additional unit in a daisy chain

I-EDIDPro™ Kramer Intelligent EDID Processing™ - Intelligent EDID handling, processing and pass–through algorithm that ensures Plug and Play operation

Multi–channel Audio Transmission - Up to 32 channels of digital stereo uncompressed signals for supporting studio–grade surround sound

Configurable HDBT port - operates as a 2-input switcher in transmitter mode, or a 3-input switcher in receiver mode

Audio De-embedding - The digital audio signal passing to the output, is de–embedded, converted to an analog signal and sent to the stereo balanced analog audio output. This enables playing the audio on a locally connected professional audio system (such as DSP) and speakers, in parallel to playing it on the speakers connected to the AV acceptor device (such as TVs with speakers)

Auto Switcher Ease of Use - Automatically switches to and plays the signal the connected display, according to user-configured preferences. Auto-switching of paired kramer-recommended transmitter and receiver devices, for simple control-less applications

Easy Online Meeting System Integrated Connectivity - Built–in flexible auto–disconnection operation of USB devices, such as room cameras and soundbars, enable detection of BYOD presenter disconnection by online meeting systems for their auto–activation, convenient integration, and ease of end–user operation according to space changing hybrid sessions needs

Display On/Off Operation - Meeting presentation is simplified by manually or automatically turning ON/OFF a CEC–enabled or serially-controlled display when the presentation source is plugged in / unplugged with user–defined shut–down delay

Simple Control - Remote IP-controller connection, browser operation webpage, local panel buttons,

or remotely connected contact−closure buttons, for easy and fully−flexible user port selection, signal routing, and switcher control

Built–in Intelligent Control Gateway - Remote IP–driven intelligent control of connected AV, USB and sensor devices via CEC, RS–232, IR or I/O. Eliminating the need for an external control gateway, this feature reduces installation complexity and costs, to enable easy integration with control systems, such as Kramer Control

Ethernet Extension - Ethernet interface data flows in both directions, allowing extension of up to 1 Gbps Ethernet connectivity for LAN communication and device control

Bidirectional RS–232 Extension - Serial interface data flows in both directions, allowing data transmission and device control

Bidirectional Infrared Extension - IR interface data flows in both directions, allowing remote control of peripheral devices located at either end of the extended line

Secured Network Connection - Standard IT−grade 802.1x authentication for secured IT LAN connectivity

Comprehensive Management - Local panel indication LEDs to facilitate easy local maintenance and troubleshooting. Remote IP–driven firmware upgrade and management via user–friendly embedded web pages and an optional site−wide management system, ensure lasting and field−proven deployment

Easy and Elegant Installation - A sleek and small sized unit that has a configurable role. It can be field programmed as either a transmitter (at the desk side) or a receiver (at the display side) to save valuable installation time

## TECHNICAL SPECIFICATIONS

| | |
|---|---|
| Inputs | 1 DP Alt Mode & PD 3.0 USB-C: On a USB type–C female connector |
| | 1 HDMI: On an HDMI female connector |
| | 1 HDBT: On an RJ−45 female connector (configurable direction) |
| Outputs | 1 HDBT: On an RJ−45 female connector (configurable direction) |
| | 1 HDMI: On an HDMI female connector |
| | 1 Balanced Stereo Audio Line: On 5–pin terminal block connector |
| Ports | 2 USB 3.2 Host: On a USB–C & USB−B female connectors |
| | 3 USB 3.2 Device: On USB type–A female connectors |
| | 1 RS–232: On a 3–pin terminal block |
| | 1 IR: On a 3.5mm mini jack for IR extension |
| | 2 GPIO: On a 2–pin terminal block |
| Extension Line | Reach: Up to 40m (131ft), using Kramer HDBaseT cables |
| | Standards Compliance: HDBaseT 3.0 |
| Video | Max Data Rate: 18Gbps bandwidth (6Gbps per graphic channel) |
| | Max Resolution: 4K@60Hz (4:4:4) resolution |
| | Content Protection: HDCP 2.3 |
| | HDMI Support: Deep Color, 3D, HDR as specified in HDMI 2.0b |
| USB Features | USB 3.2 Data Rate: Up to 10Gbps |
| | Integrated USB Hubs: 1 |
| | Standards Compliance: USB 3.2 GEN 2, 2.0 and 1.1 |
| Extended USB | USB 2.0 Data Rate: Up to 480Mbps |
| | Transmitted Data Bandwidth: Up to 300Mbps |
| | Standards Compliance: USB 2.0 and 1.1 |
| Extended RS-232 | Baud Rate: 300 to 115200 |
| Analog Audio | Max Output Signal Level: 15dBu |
| | Impedance: 500Ω |
| | Bandwidth: 20Hz — 20kHz |
| | THD + N: 0.002% @1kHz at nominal level |
| | S/N Ratio: −93dB, 20Hz — 20kHz |
| | Coupling: DC |
| Power | Power Adapter:<br>Source: 20VDC |
| | Max. Consumption: 6A |
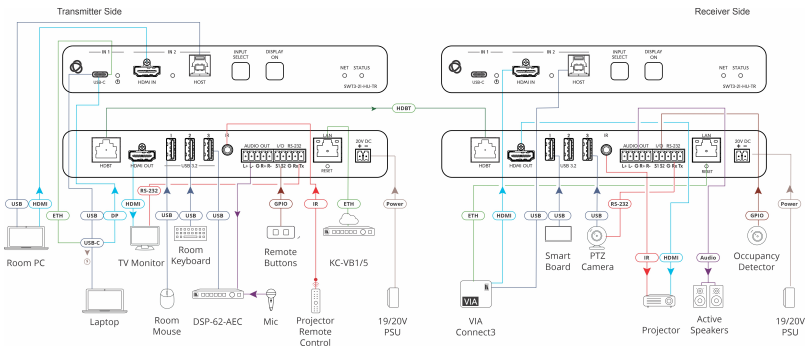
| | |
|---|---|
| | Max. Power: 120W<br><br>USB-C Charging<br>Max. Power: 60W<br><br>Note: When powered with 20V power supply only<br><br>Compliance: PD 3.0<br><br>USB Device Charging<br>Max. Total Current: 2A |
| Environmental Conditions | Operating Temperature: 0° to +40°C (32° to 104°F)<br><br>Storage Temperature: −40° to +70°C (−40° to 158°F)<br><br>Humidity: 10% to 90%, RHL non−condensing |
| Regulatory Compliance (Standards Compliance) | Safety: CE, UL<br><br>Environmental: RoHs, WEEE |
| Enclosure | Size: Mega Tool<br><br>Material: Aluminum<br><br>Cooling: Fan Ventilation |
| Accessories | Included: 20V Power adapter and cords, USB−C multi−signal cable |
| General | Product Dimensions 19 x 11.6 x 2.7 cm (7.4", 4.5", 1") [W, D, H]<br><br>Product Weight 0.9kg (1.9lbs) approx<br><br>Shipping Dimensions 35.1 x 21.2 x 7.2 cm (13.8", 8.3", 2.8" [W, D, H]<br><br>Shipping Weight 1.44kg (3.1lbs) approx |
| Product Dimensions | 19.00cm x 19.50cm x 2.70cm (7.48" x 7.68" x 1.06" ) W, D, H |
| Product Weight | 0.9kg (2.0lbs) approx |
| Shipping Dimensions | 35.10cm x 21.20cm x 7.20cm (13.82" x 8.35" x 2.83" ) W, D, H |
| Shipping Weight | 1.5kg (3.2lbs) approx |