KDS-17EN-SW2

KDS-17EN-SW2 2x1 4K60 4:4:4 AVoIP
Switcher Encoder with Dante

KDS-17EN-SW2 2x1 4K60 4:4:4 AVoIP Switcher Encoder with Dante for streaming 4K video and audio signals, via Ethernet over copper or optical cable in unicast (one-to-one) or multicast (one-to-many) configurations. Supports audio Dante, USB, IR, RS-232 or CEC signals

FEATURES

Outstanding end-user experience - Present video in superb 4K60 4.4.4 resolution, with best-in-class digital audio. With KDS-17, every visual detail and every nuance of sound comes through super-clearly. Enjoy extensive control of video walls, advanced connectivity options, and a wide choice of inputs/outputs and settings options

Ideal for large-scale deployments - Provide a high-performance solution fine tuned to the needs of large enterprise, education and government sites, with integrated advanced management capabilities and support for many simultaneous video streams

Easy planning and deployment - Easily and confidently integrate the AV solution into any IP network. Create A/V-enabled spaces of varying sizes swiftly and effortlessly, even without prior AV expertise. KDS-17 is very bandwidth-efficient, allowing you to leverage your IT infrastructure without perceptible network performance disruptions. Use of the existing IT network and Ethernet cabling, simplified switch configurations, and reduced dependence on skilled technicians save deployment time and cost

TECHNICAL SPECIFICATIONS

Inputs	1 HDMI: On a female HDMI connector
Outputs	1 HDMI: On a female HDMI connector
Ports	1 Ethernet: On an RJ−45 connector
	1 Ethernet On an SFP optical/copper transceiver port
	1 Balanced Audio: On a 5–pin terminal block connector
	1 RS-232: On a 3−pin terminal block connector
	1 IR: On a 3.5mm TRS connector
USB	1 USB-B Host: Connecting USB 3.0 PC/Laptop
	1 USB-C Host: Connecting USB 3.0 PC/Laptop. Charges connected hosts that support USB Power Delivery 2.0, up to 60W, when the device is powered by the optional PS−2006 20V DC power adapter
	2 USB-A Devices: Connecting USB 3.0 local devices
	1 Level USB Hub When connecting to KDS−17DEC
Network	Multicast Through RTSP (Real Time Streaming Protocol): IGMP snooping non–blocking, Layer 2
	Unicast Through RTSP (Real Time Streaming Protocol)
	Bitrate Peak: 850Mbps, 4K average: 350Mbps, 1080p average: 250Mbps
Video	Compression Standard: JPEG2K−Like, private stream
	Max Resolution: 4K@60Hz (4:4:4)
	HDR 10 Up to 4K30 4:2:2 12 bit
	HDCP 1.4 and 2.2 support
	EDID Passthrough, output resolution, predefined default EDID, or custom EDID
Resolution	4096x2160@60Hz 1600x1200@60Hz 1280x960@60Hz 848x480@60Hz 3840x2160@60Hz 1600x900@60Hz 1280x800@60Hz 800x600@60Hz 1920x1200@50Hz 1440x900@60Hz 1280x768@60Hz 720x576@60Hz 1920x1080@60Hz 1400x1050@60Hz 1280x720@60Hz 720x480@50Hz 1856x1392@60Hz 1366x768@60Hz 1224x768@70Hz 640x400@85Hz 1792x1344@60Hz 1360x768@60Hz 1152x864@70Hz 640x350@85Hz 1680x1050@60Hz 1024x768@60Hz
Audio	Supported Formats LPCM, Dolby and DTS
	LPCM LPCM upto 7.1/24−bit/192kHz
	Dolby Dolby AtmosTM, Dolby TrueHD, Dolby Digital PlusTM, Dolby Digital EX, Dolby Digital 5.1, Dolby Digital 2/0 Surround, Dolby Digital 2/0
	DTS DTS−HD Master AudioTM, DTS−HD, DTS−ES Discrete 6.1, DTS−ES Matrix 6.1, DTS Digital Surround 5.1
Security	HTTPS, 802.1x, OWASP–10, AV Streaming: AES256 encryption
User Interface	Indicators: LINK, NET and ON LEDs, front panel LCD Display
	Rear Panel: Restart and factory reset rear panel button

	Controls Embedded web pages, P3K API commands via Ethernet, front panel navigation buttons
Power	PoE+ 37V to 57V, maximum power 15W
	Optional power supply 20V DC, 6A Charger PS−2006 is required when using USB−C to charge connected hosts that support USB Power Delivery 2.0, up to 60W
Environmental Conditions	Operating Temperature: 0 to + 45°C (32 to + 113 °F)
	Storage Temperature: –20 to +70°C (–4 to + 158 °F)
	Humidity: 10% to 90%, non–condensing
Regulatory Compliance (Standards Compliance)	Safety CE,FCC
	Environmental RoHs, WEEE, UKCA
Enclosure	Size Mega Tool Deep
	Type Aluminium
	Cooling Convection Ventilation
Product Dimensions	18.90cm x 17.30cm x 2.76cm (7.44" x 6.81" x 1.09") W, D, H
Product Weight	0.9kg (2.0lbs) approx
Shipping Dimensions	31.20cm x 17.90cm x 7.60cm (12.28" x 7.05" x 2.99") W, D, H
Shipping Weight	1.1kg (2.5lbs) approx

KDS-17EN-SW2

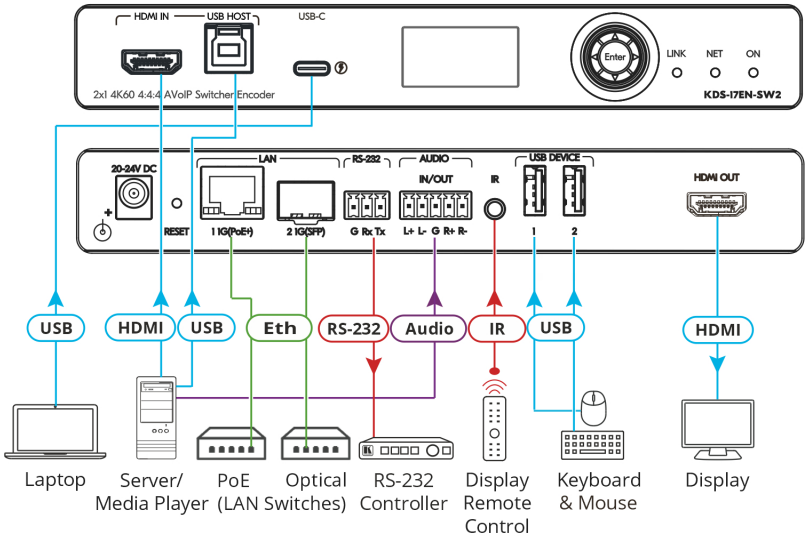
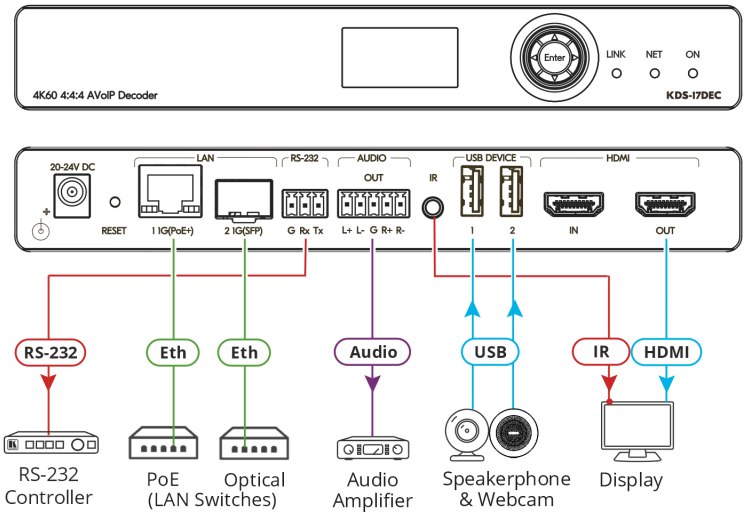
KDS-17DEC